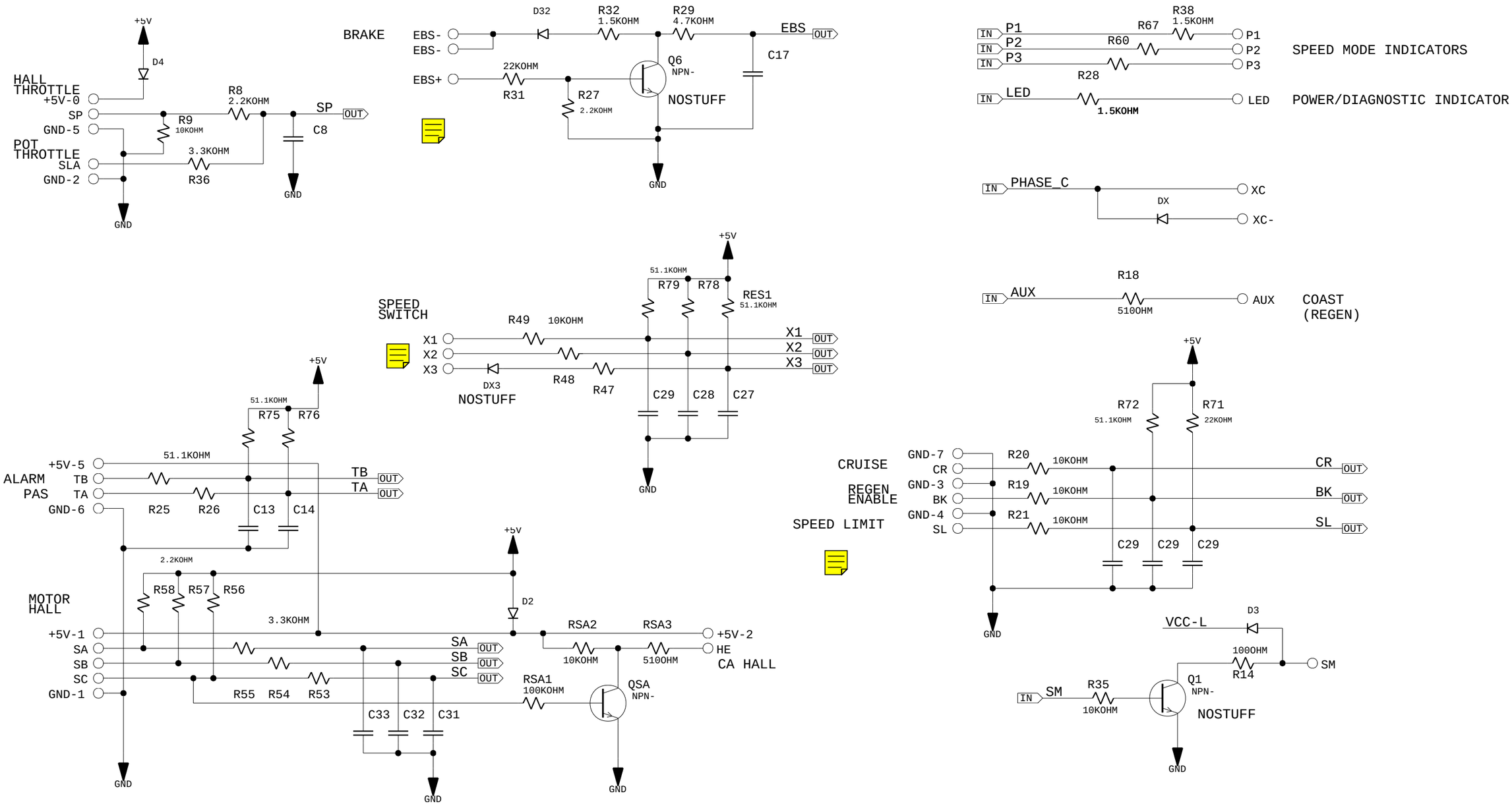
+5V
D4
HALL THROTTLE
+5V-0
SP
GND-5
POT THROTTLE
SLA
GND-2
R9
10KOHM
R8
2.2KOHM
SP
OUT
C8
3.3KOHM
R36
GND
GND
BRAKE
EBS-
EBS-
EBS+
D32
R32
1.5KOHM
R29
4.7KOHM
EBS
OUT
C17
22KOHM
R31
R27
2.2KOHM
Q6
NPN-
NOSTUFF
GND
IN
P1
P2
P3
R67
R38
1.5KOHM
R60
R28
P1
P2
P3
SPEED MODE INDICATORS
LED
1.5KOHM
LED
POWER/DIAGNOSTIC INDICATOR
PHASE_C
DX
XC
XC-
AUX
R18
510OHM
AUX
COAST
(REGEN)
SPEED
SWITCH
X1
X2
X3
R49
10KOHM
R48
R47
DX3
NOSTUFF
51.1KOHM
R79
R78
RES1
51.1KOHM
C29
C28
C27
GND
ALARM
PAS
+5V-5
TB
TA
GND-6
51.1KOHM
R25
R26
C13
C14
R75
R76
MOTOR
HALL
+5V-1
SA
SB
SC
GND-1
2.2KOHM
R58
R57
R56
3.3KOHM
D2
R55
R54
R53
C33
C32
C31
RSA2
RSA3
10KOHM
510OHM
RSA1
100KOHM
QSA
NPN-
+5V-2
HE
CA HALL
CRUISE
REGEN
ENABLE
SPEED LIMIT
GND-7
CR
GND-3
BK
GND-4
SL
R20
R19
R21
10KOHM
R72
51.1KOHM
R71
22KOHM
C29
VCC-L
D3
100OHM
R14
SM
R35
10KOHM
Q1
NPN-
NOSTUFF

EB206-A-2

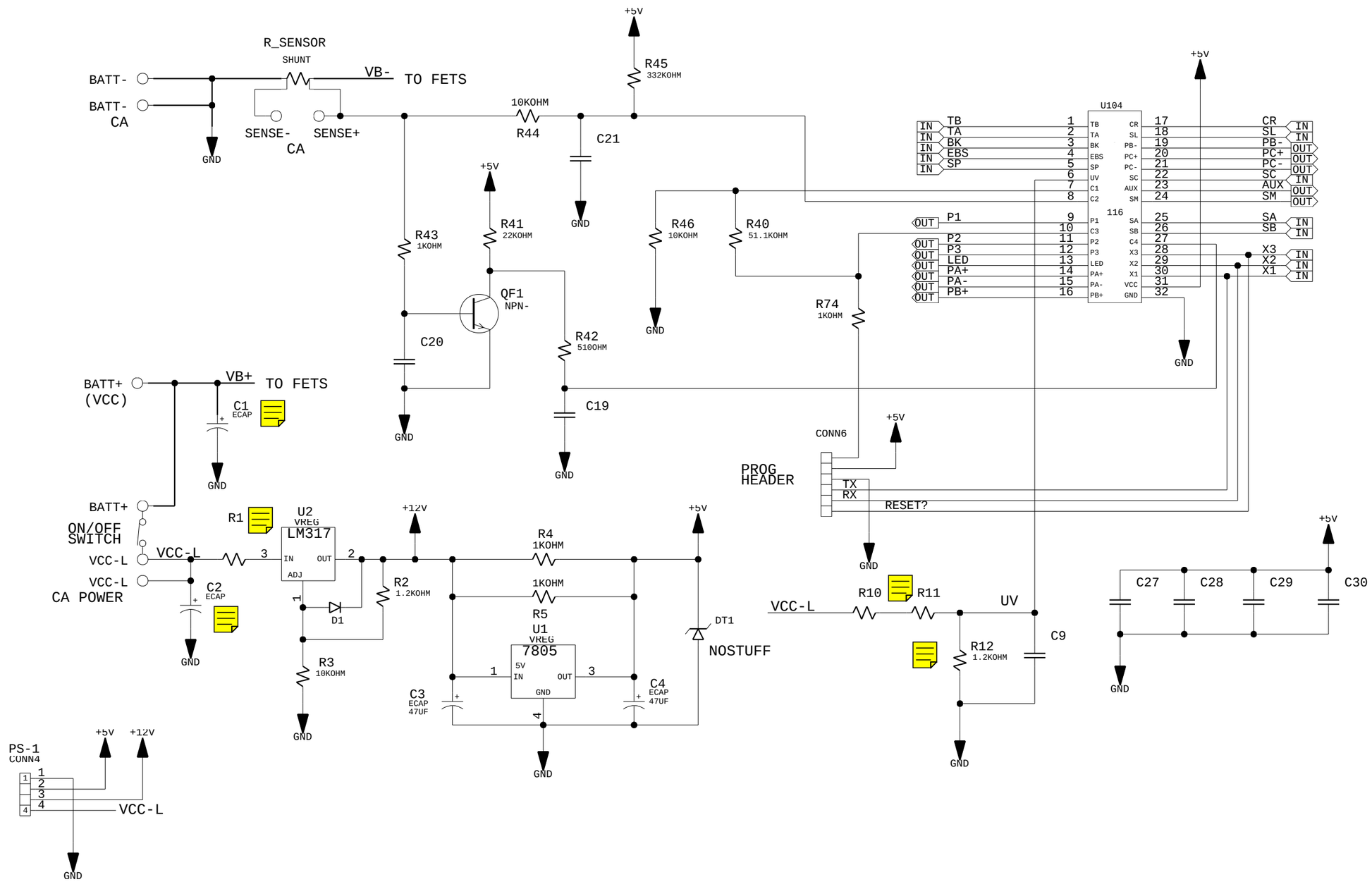
R_SENSOR
SHUNT
BATT-
BATT-
CA
VB-
TO FETS
SENSE-
CA
SENSE+
GND
10KOHM
R44
+5V
R45
332KOHM
C21
GND
R43
1KOHM
+5V
R41
22KOHM
QF1
NPN-
C20
GND
R42
510OHM
C19
GND
R46
10KOHM
R40
51.1KOHM
GND
R74
1KOHM
U104
116
TB
TA
BK
EBS
SP
UV
C1
C2
P1
C3
P2
P3
LED
PA+
PA-
PB+
CR
SL
PB-
PC+
PC-
SC
AUX
SM
SA
SB
C4
X3
X2
X1
VCC
GND
IN
OUT
+5V
GND
BATT+
(VCC)
VB+
TO FETS
C1
ECAP
GND
CONN6
PROG
HEADER
TX
RX
RESET?
+5V
GND
BATT+
ON/OFF
SWITCH
VCC-L
VCC-L
CA POWER
VCC-L
C2
ECAP
GND
R1
U2
VREG
LM317
IN
OUT
ADJ
D1
R3
10KOHM
GND
+12V
R2
1.2KOHM
R4
1KOHM
1KOHM
R5
U1
VREG
7805
5V
IN
OUT
GND
C3
ECAP
47UF
C4
ECAP
47UF
GND
+5V
DT1
NOSTUFF
VCC-L
R10
R11
UV
R12
1.2KOHM
C9
GND
+5V
C27
C28
C29
C30
GND
PS-1
CONN4
+5V
+12V
VCC-L
GND

EB206-A-2

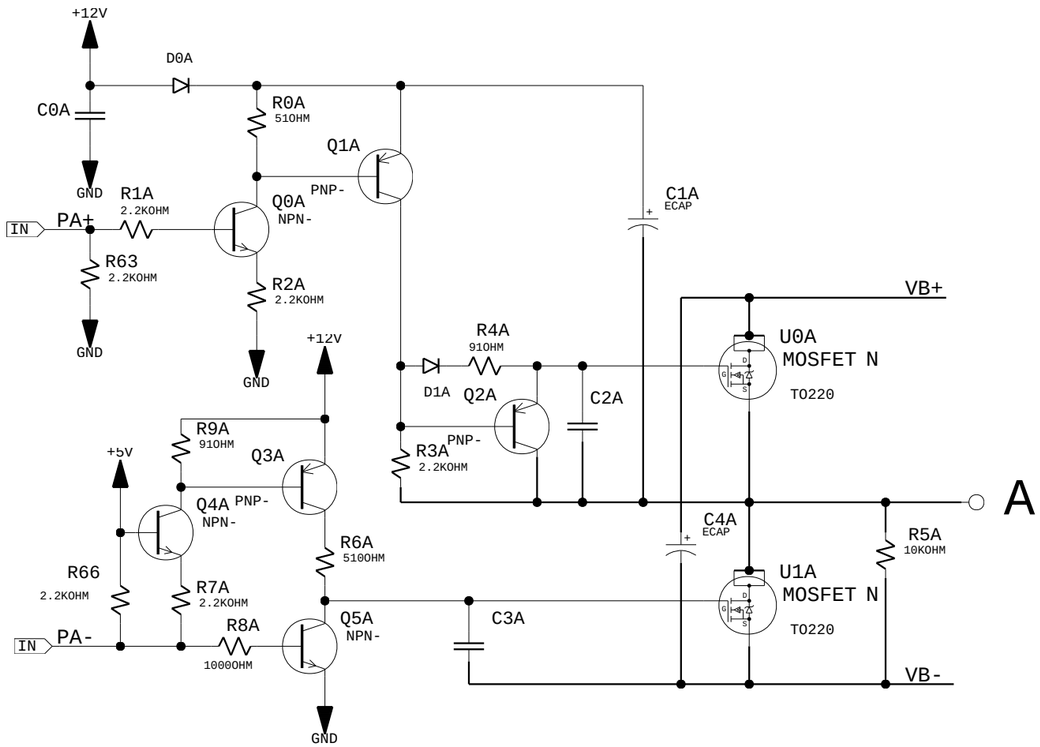
+12V
D0A
C0A
R0A
510HM
Q1A
PNP-
GND
R1A
2.2KOHM
Q0A
NPN-
IN
PA+
R63
2.2KOHM
R2A
2.2KOHM
GND
GND
C1A
ECAP
VB+
R4A
910HM
U0A
MOSFET N
TO220
+12V
D1A
Q2A
C2A
R9A
910HM
Q3A
PNP-
R3A
2.2KOHM
+5V
Q4A
NPN-
R6A
510OHM
C4A
ECAP
R5A
10KOHM
A
R66
2.2KOHM
R7A
2.2KOHM
U1A
MOSFET N
TO220
IN
PA-
R8A
1000OHM
Q5A
NPN-
C3A
VB-
GND

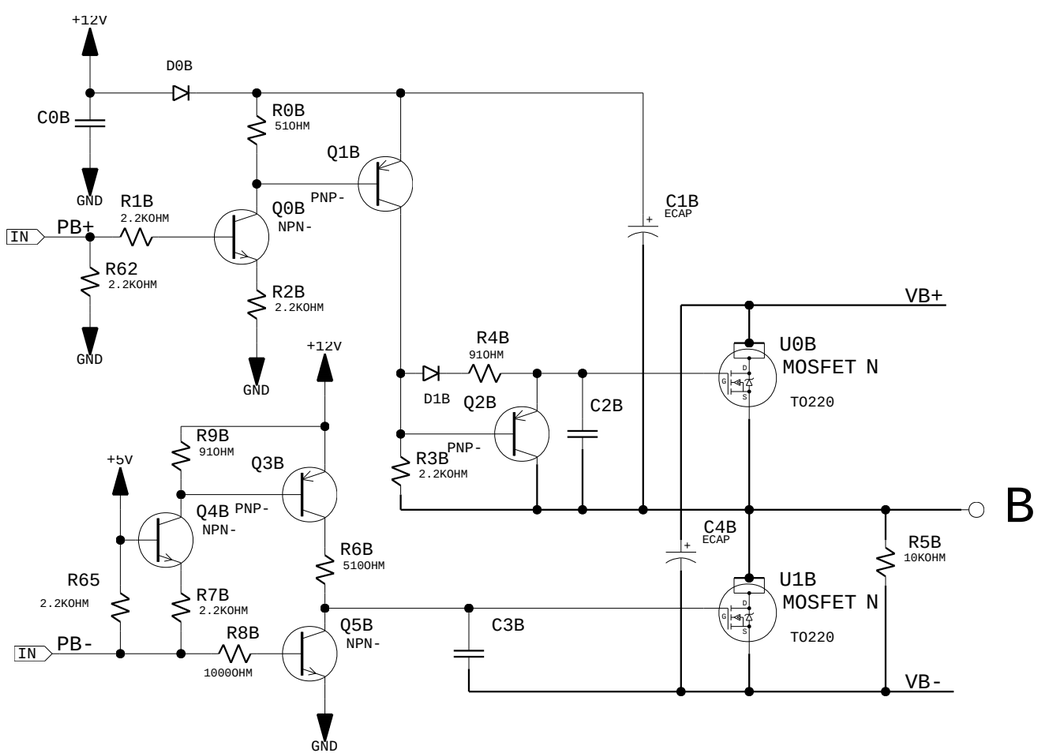
+12V
D0B
C0B
R0B
510HM
Q1B
PNP-
GND
R1B
2.2KOHM
Q0B
NPN-
IN
PB+
R62
2.2KOHM
R2B
2.2KOHM
GND
GND
C1B
ECAP
VB+
R4B
910HM
U0B
MOSFET N
TO220
+12V
D1B
Q2B
C2B
R9B
910HM
Q3B
PNP-
R3B
2.2KOHM
+5V
Q4B
NPN-
R6B
510OHM
C4B
ECAP
R5B
10KOHM
B
R65
2.2KOHM
R7B
2.2KOHM
U1B
MOSFET N
TO220
IN
PB-
R8B
1000OHM
Q5B
NPN-
C3B
VB-
GND

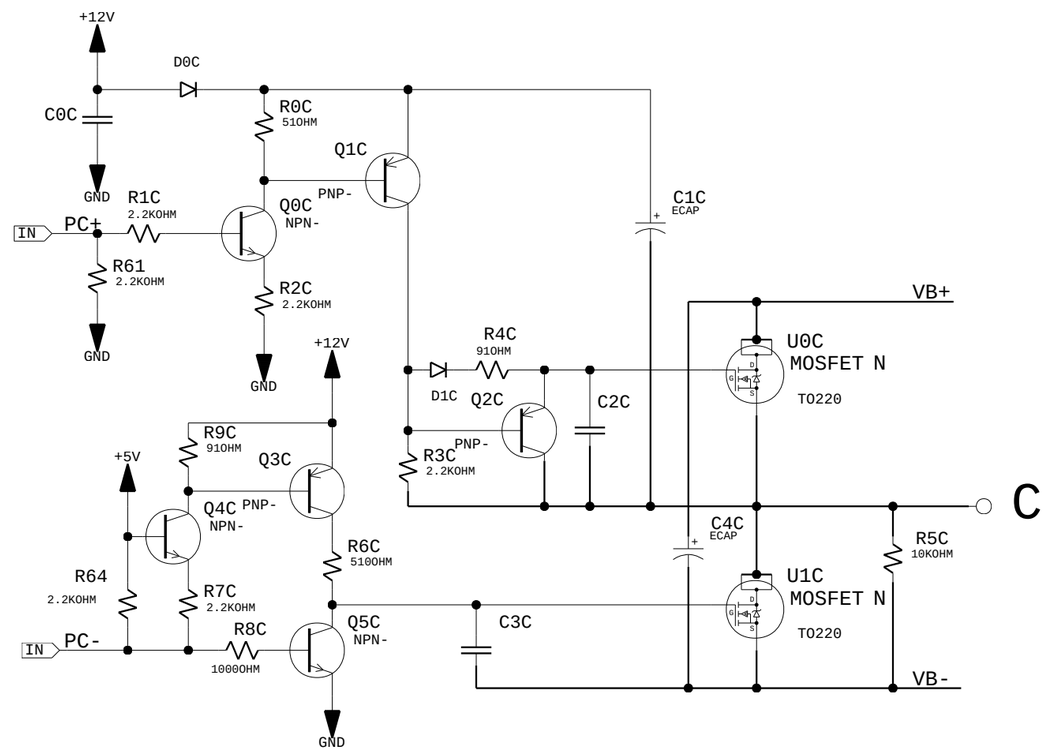
+12V
D0C
C0C
R0C
510HM
Q1C
PNP-
GND
R1C
2.2KOHM
Q0C
NPN-
IN
PC+
R61
2.2KOHM
R2C
2.2KOHM
GND
C1C
ECAP
VB+
R4C
910HM
U0C
MOSFET N
TO220
+12V
D1C
Q2C
C2C
R9C
910HM
Q3C
PNP-
R3C
2.2KOHM
+5V
Q4C
NPN-
R6C
510OHM
C4C
ECAP
R5C
10KOHM
C
R64
2.2KOHM
R7C
2.2KOHM
U1C
MOSFET N
TO220
IN
PC-
R8C
1000OHM
Q5C
NPN-
C3C
VB-
GND

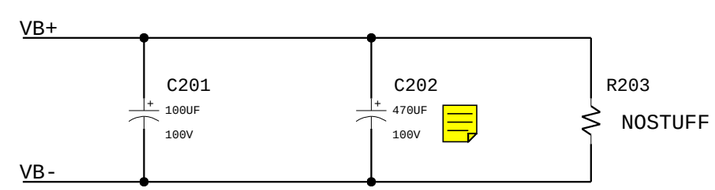
VB+
C201
100UF
100V
C202
470UF
100V
R203
NOSTUFF
VB-

EB206-A-2